Note:
Overall height and footprint of the tripod will vary by the setup processes and environment.

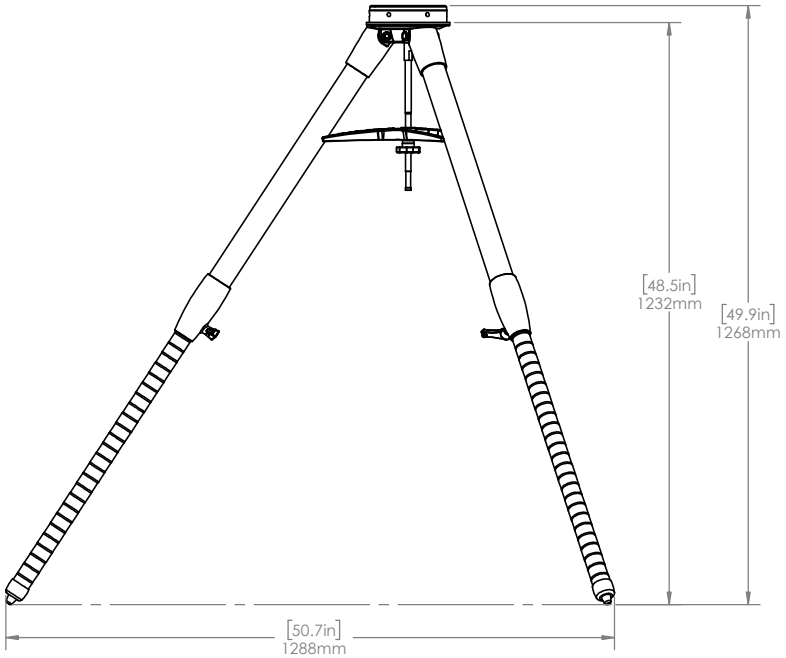

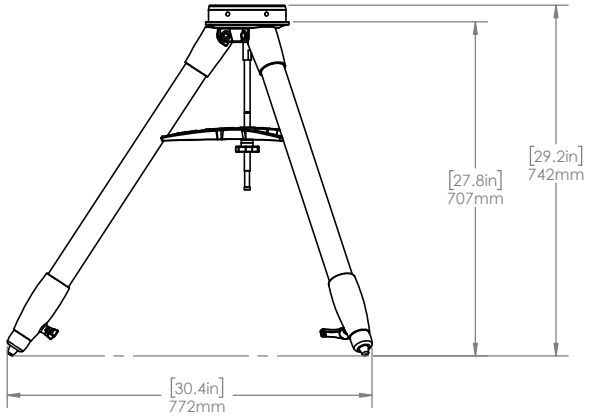

Tripod legs are fully extended.

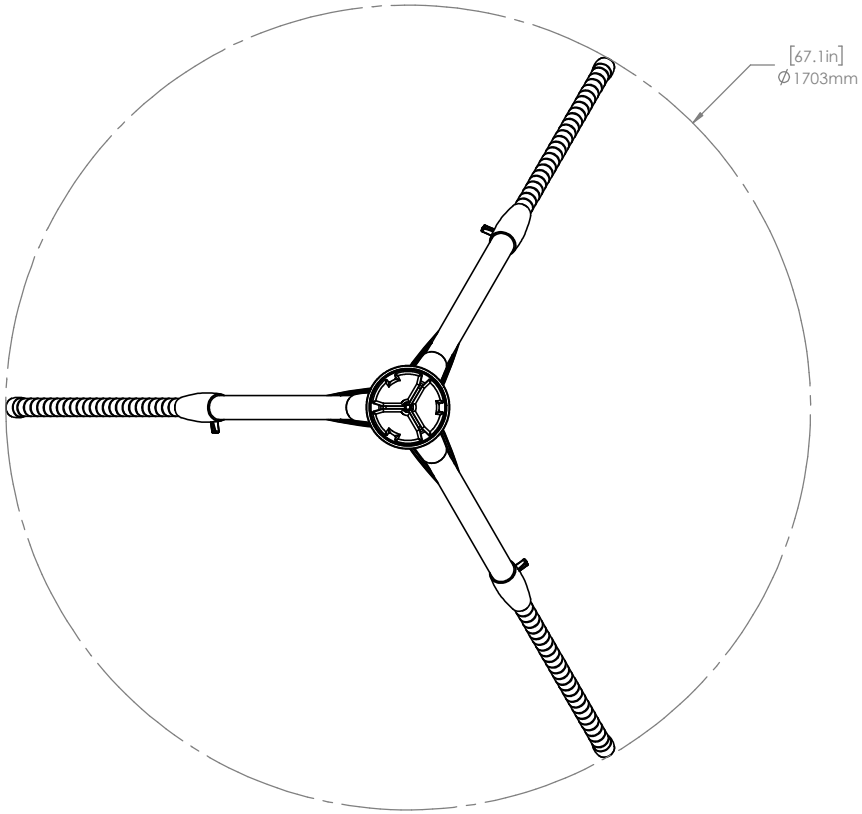

Tripod legs are fully retracted.

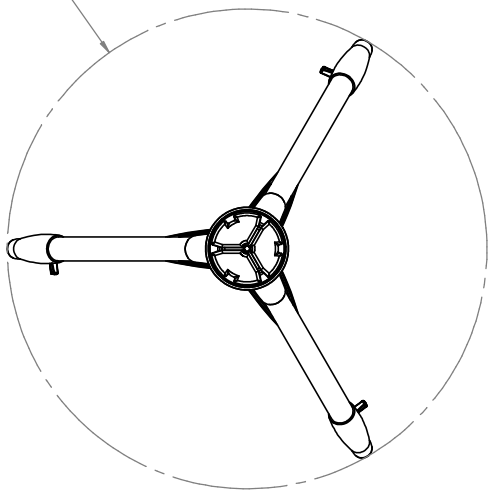

UNLESS OTHERWISE SPECIFIED:		NAME	DATE
DIMENSIONS ARE IN MILLIMETER	DRAWN	WM	03/05/21
TOLERANCES:	CHECKED		
FRACTIONAL ±	ENG APPR.		
ANGULAR: MACH ±0.50	MFG APPR.		
TWO PLACE DECIMAL ±0.20	Q.A.		
THREE PLACE DECIMAL ±0.005	COMMENTS:		
INTERPRET GEOMETRIC TOLERANCING PER:			
MATERIAL			
FINISH			
DO NOT SCALE DRAWING			

PROPRIETARY AND CONFIDENTIAL

THE INFORMATION CONTAINED IN THIS DRAWING IS THE SOLE PROPERTY OF CELESTRON, LLC. ANY REPRODUCTION IN PART OR AS A WHOLE WITHOUT THE WRITTEN PERMISSION OF CELESTRON, LLC IS PROHIBITED.

CELESTRON® 2835 Columbia St. Torrance, CA 90503

TITLE:

CGX Tripod Assembly

SIZE	DWG. NO.	REV
C	ATL1600_Rev4	

SCALE: 1:12 | WEIGHT: 4.8 kg | SHEET 1 OF 1